ISSN (Print) 1226-1750
ISSN (Online) 2233-6656
Journal of Magnetics 19(1), 20-27 (2014) http://dx.doi.org/10.4283/JMAG.2014.19.1.020

Study on Change of Poly ADP Ribose Polymerase in the Rat with Thrombotic Stroke by Full Wave Cockroft Walton method's Transcranial Magnetic Stimulation

Whi-Young Kim[1]* and Jun-Hyoung Kim[2]

[1]*Department of Biomedical Engineering, Dongju College University, Busan 602-715, Korea*
[2]*Department of Nursing, Tong Myung University, Busan 608-711, Korea*

(Received 26 November 2013, Received in final form 17February 2014, Accepted 17 February 2014)

This study examined the relationships between protein expression and Poly ADP ribose polymerase in brain cell death in brains damaged by thrombotic stroke and treated with the Full Wave- Cockroft Walton (FWCW) method of Transcranial Magnetic Stimulation (TMS). The two-way switching element for TMS drove a half-bridge inverter of the current resonance of direct current voltage (+) and direct current voltage (–), and the experiment was conducted by stimulating the mice with thrombotic stroke through a range of pulses. Thrombotic stroke was caused of ligation of the common carotid artery of male SD mice, and blood reperfusion was conducted five minutes later. Protein expression was examined in immune reaction cells, which reacted to an antibody to Poly ADP ribose polymerase in the cerebrum cells, and western blotting. Observations of the PARP changes after thrombotic stroke showed that the number of Poly ADP ribose polymerase reactions were significantly lower ($p < 0.05$) in the group treated with TMS of the FWCW than the group with thrombotic stroke 24 hours after its onset. The application of FWCW-TMS helped prevent the necrosis of nerve cells and might prevent the brain damage that occurs as a result of thrombotic stroke, and improve the function recovery and disorder of brain cells.

Keywords : full wave cockroft walton, transcranial magnetic stimulation, poly ADP ribose polymerase, ischemic

1. Introduction

Disorders of the nerve cell's signal transmission and brain function can occur when the blood flood rate decreases to below 35% (0). When the rate is 20% or less, irreversible damage of nerve cells and infarction occur and the supply of dextrose decreases, leading to cell death from a biochemistry reaction [1, 2]. Energy exhaustion causes complicated biochemical reactions, such as cell membrane ion pump disorder, glutamate's extracellular concentration increase, excessive inflow into cells of calcium ion, free oxygen radical generation, lactic acid accumulation from base dextrose metabolism [3]. The function of the cell membrane is ultimately destroyed, causing structural disorder of the brain structure and stroke. Stroke is one of the three leading causes of death in Korea, which requires long-time efforts and expense. In addition, the frequency is expected to increase with increased longevity, an increase in geriatric diseases from the changes in the diet and living environment. Thrombotic stroke, which is the largest cause of a stroke, is related to the synaptic plasticity and apoptosis in the damages from the thrombotic condition or external wounds [4].

Nerve cell apoptosis occurs during long-term and repetitive conditions, even from mild shock with no brain cell damage. Necrosis is caused by secondary causes, such as an increase in brain pressure, low oxygen and thrombotic stroke in the part damaged directly [5]. Besides the parts of necrosis, the surrounding areas of brain damage, which cause cell death, has no action electric potential when the blood flow is decreased under the condition of low oxygen thrombotic stroke, but there is a penumbra area where the ion constancy is impaired through ATP metabolism and cell membrane [6]. This part is recovered by proper treatment after low oxygen thrombotic stroke, and cell death in the surrounding area is caused mainly by apoptosis. Low oxygen thrombotic stroke causes not only cell damage by Intra-axial hemorrhage, but also external inflammation including machrophage accumulation in the surrounding areas. Apoptosis occurs in the less damaged parts in the surrounding areas of the central part of brain

©The Korean Magnetics Society. All rights reserved.
*Corresponding author: Tel: +82-51-200-3449
Fax: +82-51-200-3235, e-mail: ndyag@dongju.ac.kr

© 2014 Journal of Magnetics

damage and it is a form of programmed cell death occurring through a series of activities [7]. Poly ADP-ribose polymerase, which is involved in necrosis, helps repair damaged DNA and participates in cell division and gene expression. Poly ADP-ribose polymerase repairs the DNA in the process of sending ADP-ribose to histone and many nucleus proteins including itself. Poly ADP-ribose polymerase uses NAD^+ as the supply of ADP-ribose [8]. When excessive activation of Poly ADP-ribose polymerase occurs, the cells die from the excessive energy loss of ATP and NAD^+. This study examined the changes in protein Poly ADP-ribose polymerase involving necrosis in the cerebrum by the TMS of Full Wave- Cockroft Walton (FWCW) method in mice with thrombotic stroke of the common carotid artery, at 6 hours, 12 hours and 24 hours, as well as the treatment effect of TMS after a stroke [9, 10].

2. Design

2.1. Research model

Male SD rats, 7-week old, specific pathogen free (SPF), and The subject animals were kept under anesthesia. A 2 cm part of the common carotid artery was incised in the very middle of a neck, the vagus nerve was separated, and the common carotid artery was exposed. The common carotid arteries on both sides were ligated completely with non-absorbable sutures and the condition was maintained for five minutes. The sutures were removed later for the reperfusion of blood. The animals were divided into the control group with no common carotid artery atresia, the thrombotic stroke group with common carotid artery atresia, and FWCW-MS group, where TMS of FWCW method was used. The thrombotic group and FWCW group were kept under anesthesia with 3% isoflurane for 30 minutes after 12, 24, and 48 hours. For the FWCW-MS group, at the same

2.2. Transcranial Magnetic Stimulation of FWCW method

For magnetic stimulation, an accurate current density and various controls are important. For density control, the action time control through a pulse of magnetic stimulation output and the method of changing the repetition rate of the pulse can be applied. This adds a two-way element, ZCS resonant inverter, and FW-CW, Pulse Forming Circuit (PFN), makes accurate output control through half of the direct current and a constant pulse width control, and suggests a new method for PFN [20, 22, 23]. Figure 1 shows a new magnetic stimulation composed of a two-way element, transformer, ZCS (Zero Crossing Switching) resonant inverter, FWCW circuit, and PFN circuit. In addition, rather than one high energy pulse, using a large amount of energy provides deeper permeability and less load to the system. A voltage multiplier using a capacitor and diode simply makes a high voltage from a low voltage, and behaves in a similar manner to a transformer, which is less expensive but less efficient. FWCW output voltage of the second end can be expresses as equation (1)

$$V_{out} = 2n^{Vpk} - V_{drop} \tag{1}$$

No voltage drop opened in FWCW of the second end

$$V_{out} = 2 \times 2 \times V^{pk} \tag{2}$$

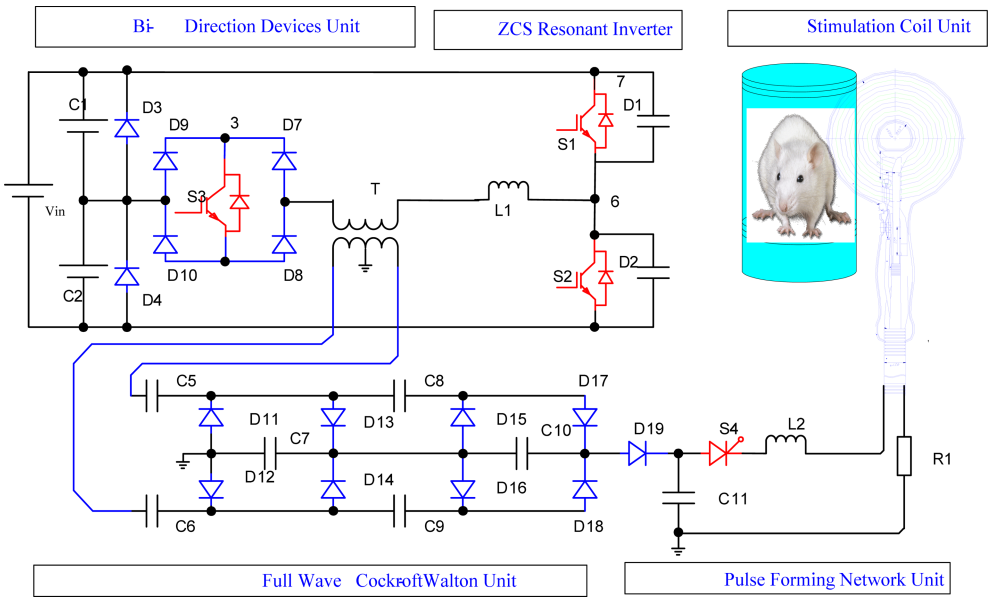

Fig. 1. (Color online) A new magnetic stimulation composed of a two-way element.

The FWCW control and ripple calculation can be expresses as follows.

$$V_{drop} = \left[\frac{I_{load}}{4Fc}\right]^{*(n^2+2n)} \quad (3)$$

I_{LOAD} is the load current,
C is the capacitance end
F is the alternating current frequency (Hz),
n is the number of ends

When V_{drop} is deducted from the equation, the following formula can be derived.

$$V_{output} = 2n^{vpk} - \left[\frac{I_{load}}{4Fc}\right]^{*(n^2+2n)} \quad (4)$$

Equation (5) can be used when a ripple voltage has the same capacitor in all ends.

$$V_{output} = \left[\frac{I_{load}}{2Fc}\right]^{*(n)} \quad (5)$$

With given input and output values, the optimal number of ends can be expressed using 6.

$$N_{optimal} = \text{int}\left[\frac{0.521\,V_{OUT}}{V_{pk}}\right] \quad (6)$$

Using the drive pulse and display for driving S1, S2 and S3 are controlled using AT90S8535 of the ATMEL series, and through a keypad, the IGBT drive module's EXB841 of FUJI is used for delay, repetition and various pulses (Figure 2). When the inductor's current is above the set value in the current rating, the type of steady current is kept through current rating control mode. There is some distortion in the output voltage, but a stable output voltage is made when it is changed to below the current rating. The level of magnetic induction of magnetic stimulation in the experiment was 0.1-3.1 Tesla, the pulse duration was 250-350 μm, and the stimulation frequency was 0.1-100 Hz.

2.3. Western Blotting

The cerebrum was arranged according to the parts and a homogenizer was used for fragmentation. After centrifugal separation, the upper layer liquid was discarded and washed three times with 2.5 ml cold PBS. The amount of protein after centrifugal separation and upper layer liquid obtained was measured at 760 nm using a protein assay kit for absorbence. In the protein, the lysis buffer and sample buffer were mixed and boiled at 100°C as a heat block for six minutes and the sample was collected by centrifugal separation. 35% polyacrylamide mix, third distilled water, 1.5 M tris (pH 8.8), 10% SDS, 10% ammonium persulfate made on that day, and TEMED were mixed. After preparing the separating gel, it was washed and the gel was made into a solid by pouring liquid on an electrophoresis glass plate. Stacking gel was mixed with 35% polyacrylamide mix, triple distilled water, 1 M tris (pH 6.8), 10% SDS, 10% ammonium persulfate and TEMED, and poured on the separating gel to form the gel. Electro-

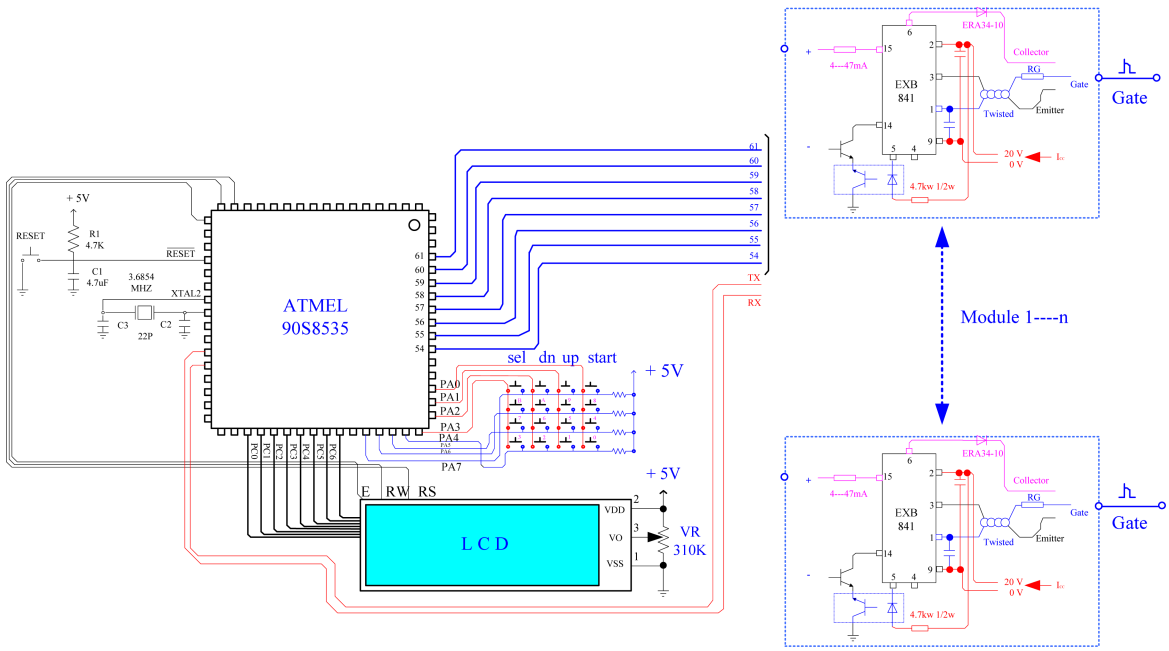

Fig. 2. (Color online) Using the drive pulse and display for driving S1, S2 and S3 are controlled using AT90S8535 of the ATMEL series.

phoresis running buffer made 10× stock by melting the following: tris base 25.0 g, glycine 124 g, and SDS 20 g in 2 *l*. The protein (10-40 μl) was added and flowed for two hours at 110 V. The electrophoresis gel was transferred on a nitrocellulose membrane at 110 V for two hours. The transfer buffer containing in 1 *l*, tris-base 5.0 g glycine 15.00 g, and methanol 300 ml was kept at 5°C for use. A thin membrane was washed with TTBS (pH 7.5) liquid composed of 250 mM tris-base, 3.54 M NaCl, third distilled water, and tween 25, placed in 6% skim milk and kept at 5°C for one day. The same first antibody was activated for two hours by putting a thin membrane in the liquid diluted by 1000 times in skim milk and washed five times for 10 minutes in TTBS liquid. The second antibody was induced for two hours in a liquid diluted 1200 times in 6% skim milk. ECL kit liquids A and B were well mixed at 50:1 and absorbed in a thin membrane for two minutes. A thin membrane was placed on a cassette and exposed to light with X-ray film. After exposure to light, expression and band, it was fixed in a fixing tool and the optical density was measured for each band using Bio-rad.

2.4. Data arrangement

All data was analyzed using SPSS 12.0K/PC after encoding. The control group, stroke occurrence group, and the treatment group after stroke were examined to determine the effect at a significance level of $\alpha = 0.05$. ANOVA was used to examine the differences between the control group, stroke occurrence group, and treatment group after stroke occurrence.

3. Experimental Results

Fig. 3 It is listed by site stimulation coil with the actual design. There was no control of the direct resonant inverter, the shape of the stimulation coil equipment voltage increased with time over a wide range depending on the load condition. In the non-resonant inverter, depending on the inverter cycle, the vibration was high according to the on/off switching action, and amount of interruption amount between the leakage inductance of the high voltage transformer and a coil. The inverter output current increased slightly in the early stages and became stabilized in proportion to charging. As the PPS increased, the peak of the current decreased slightly, and the efficiency per end pulse of magnetic stimulation decreased in proportion to pps. Fig. 4 In experiments, we show a block diagram of a complete magnetic stimulation. Fig. 5 It shows the waveforms of the IGBT drive module's. Fig. 6 IGBT drive module's EXB841 of FUJI is used for delay, repetition and various pulses. The output curve depending on pps increased, showing decreasing tendency of inclination with time. When the switching occurrence increased, the charging voltage increased and the energy increased, showing an increase in peak current. Therefore, the pulse output energy

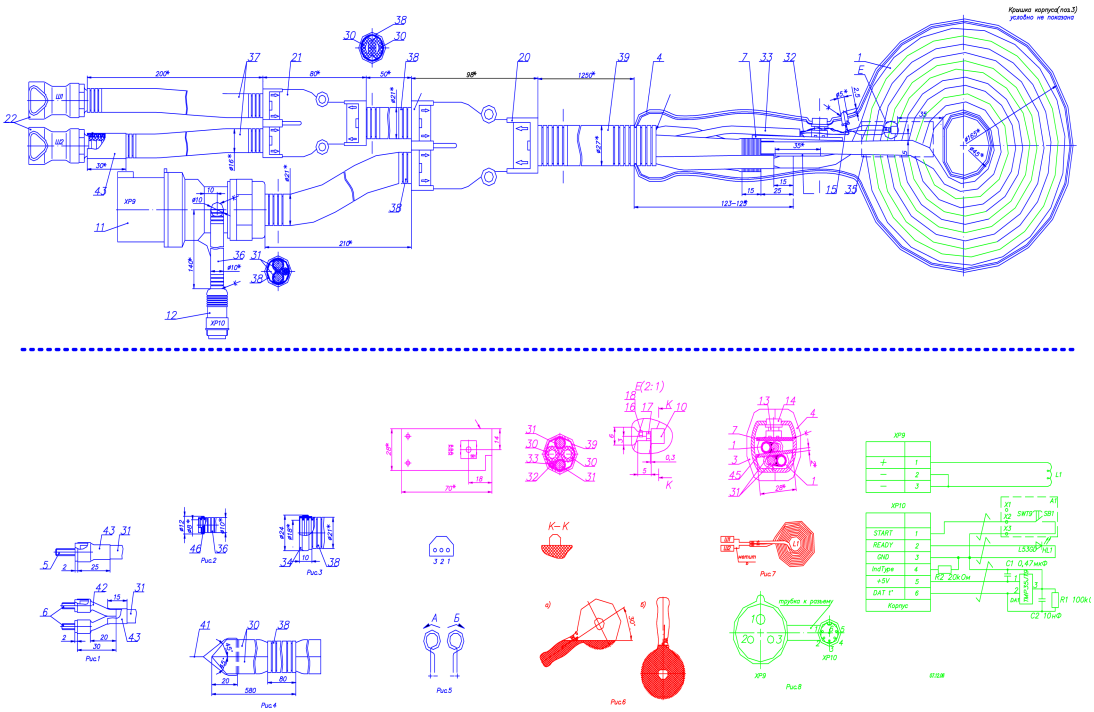

Fig. 3. (Color online) It is listed by site stimulation coil with the actual design.

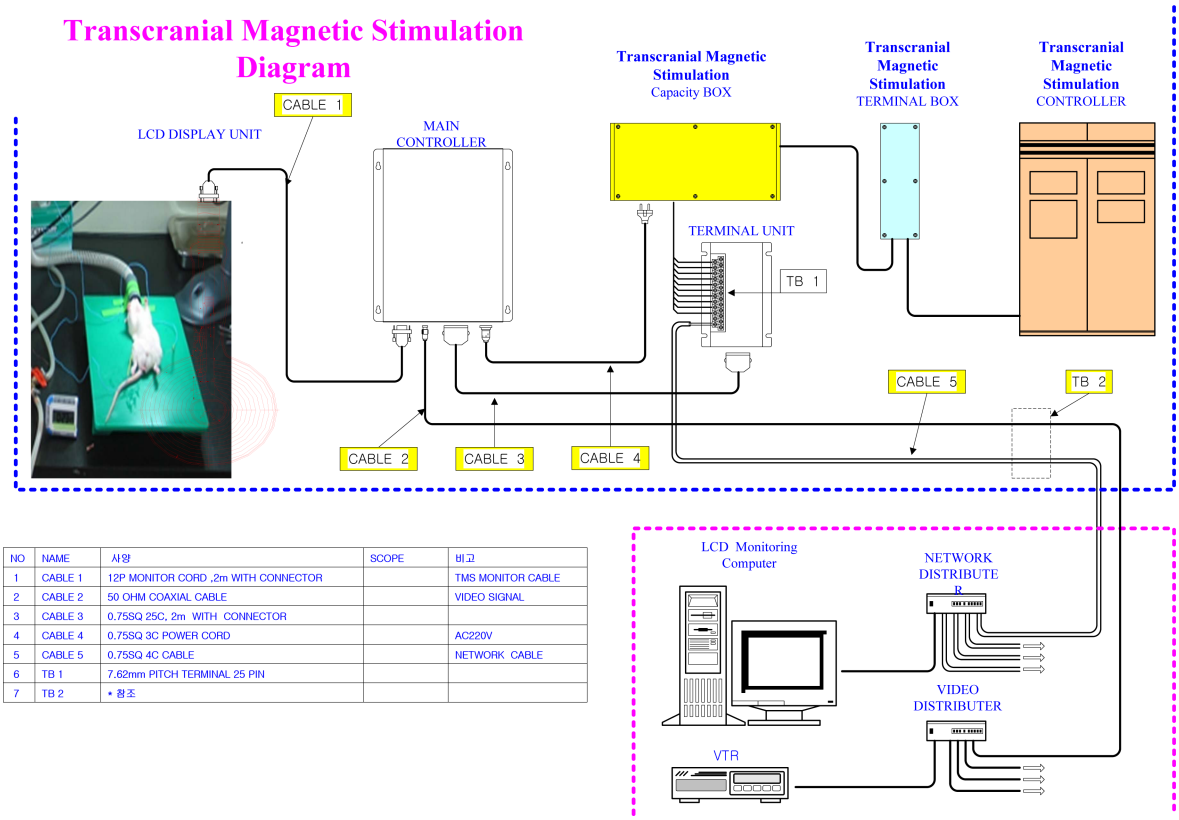

NO	NAME	사양	SCOPE	비고
1	CABLE 1	12P MONITOR CORD ,2m WITH CONNECTOR		TMS MONITOR CABLE
2	CABLE 2	50 OHM COAXIAL CABLE		VIDEO SIGNAL
3	CABLE 3	0.75SQ 25C, 2m WITH CONNECTOR		
4	CABLE 4	0.75SQ 3C POWER CORD		AC220V
5	CABLE 5	0.75SQ 4C CABLE		NETWORK CABLE
6	TB 1	7.62mm PITCH TERMINAL 25 PIN		
7	TB 2	* 참조		

Fig. 4. (Color online) In experiments, we show a block diagram of a complete magnetic stimulation.

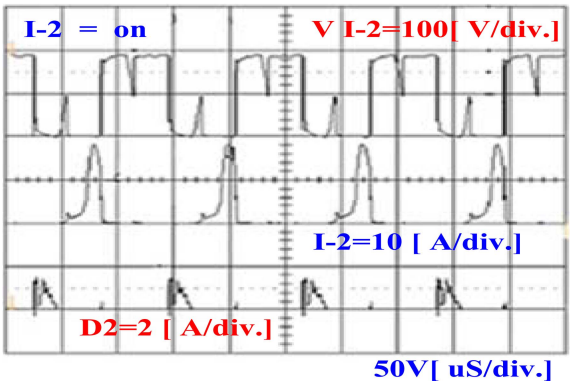

Fig. 5. (Color online) It shows the waveforms of the IGBT drive module's.

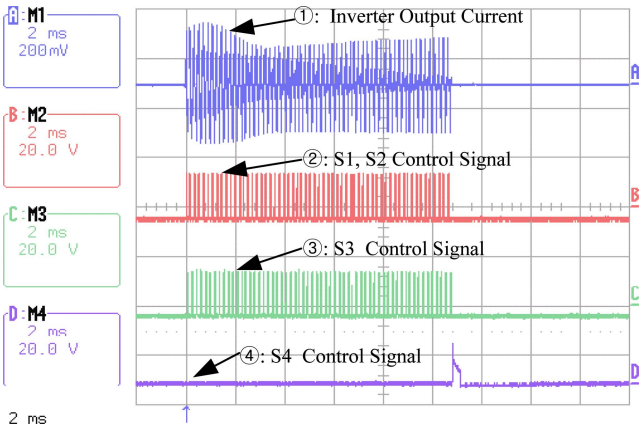

Fig. 6. (Color online) IGBT drive module's EXB841 of FUJI is used for delay, repetition and various pulses.

of magnetic stimulation increased. Fig. 7 It shows the results of stimulation: (Maxwell 3D: Structure, coil whole B vector) Helix Type Coil analysis of the stimulation coil with the ANSOFT Tool.

The change in Poly ADP-ribose polymerase protein expression in the cerebrum was 116.02 ± 4.00 in the control group at 23 hours after thrombotic stroke, as shown in Figure 8. In the thrombotic stroke group and FWCW-MS group, the values were 152.05 ± 4.60 and 157.67 ± 4.6 respectively, showing an increase compared to the control group. Fig. 8 It shows the results of simulation: (Maxwell 3D: Creative, YZ B vector) Helix Type Coil analysis of the stimulation coil with the ANSOFT Tool. Fig. 9 After stimulation the 1, 20, 50, 90 PPS treatment pulse, Poly ADP-ribose polymerase protein expression in the cerebrum (left: FWCW-TMS, right: none). Fig. 10 After stimulation the 30, 60, 100, 150 Switching treatment Pulse, Poly ADP-ribose polymerase protein expression in the cerebrum (left: FWCW-TMS, right: none). Fig. 11 The following figure

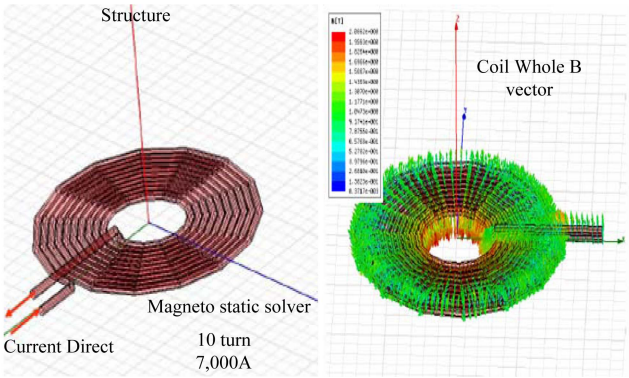

Fig. 7. (Color online) It shows the results of simulation: (Maxwell 3D: Structure, coil whole B vector) helix type coil analysis of the stimulation coil with the ANSOFT tool.

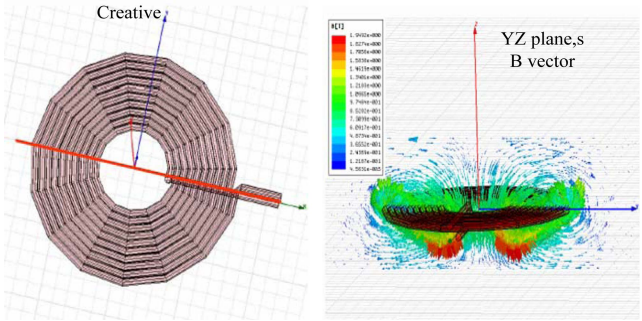

Fig. 8. (Color online) It shows the results of simulation: (Maxwell 3D: Creative, YZ B vector) helix type coil analysis of the stimulation coil with the ANSOFT tool.

designed and produced in a laboratory experiment is implemented. Fig. 12 The time evolution of the TMS output power at the condition of the blocking capacitor of 1 mF and input power of 209W. Fig. 13 Interleukins-6 reaction cells depending on time suggests that the number of IL-6 reaction cells increased in the early stages in the thrombotic stroke group and FWCW-MS group and there were large differences in the later stage, Poly ADP-ribose polymerase expression after 24 hours was 115.00 ± 3.00 in the control group, 175.07 ± 4.00 in the thrombotic stroke group, and 151.18 ± 4.01 in the FWCW-MS group, indicating a significant decrease ($p < 0.05$) compared to the thrombotic stroke group. Poly ADP-ribose polymerase expression in the thrombotic stroke group and FWCW-MS group 40 hours after the thrombotic stroke was 193.49 ± 6.50 and 180.00 ± 1.00, respectively, showing a decrease compared to the thrombotic stroke group.

4. Conclusion

This study did not use a step-up transformer, but employed a current resonant half wave bridge inverter and Full Wave Cockcroft-Walton circuit to the charge direct current from 0 to 820 [V] by changing the storage condenser, and the on/off tool, which controls the number of switching and pps, were composed for the experiment. When the number of switches was controlled, the condenser charging voltage and pulse were changed lineally with magnetic stimulation output energy. Two types of output control factors, such as the control of output energy

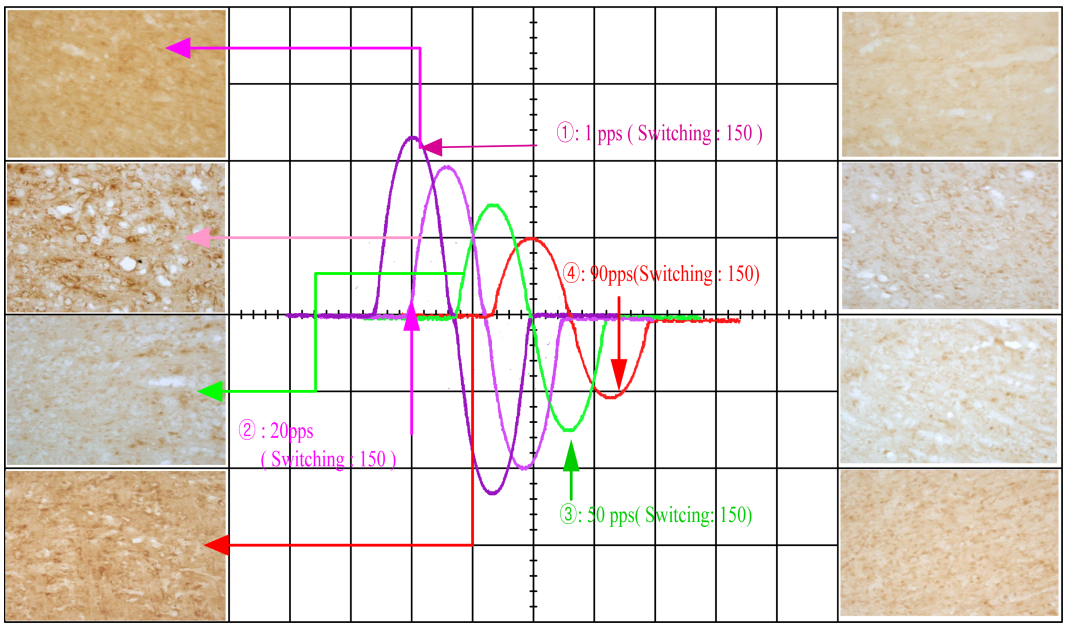

Fig. 9. (Color online) After stimulation the 1, 20, 50, 90 PPS treatment pulse, poly ADP-ribose polymerase protein expression in the cerebrum (left: FWCW-TMS, right: none).

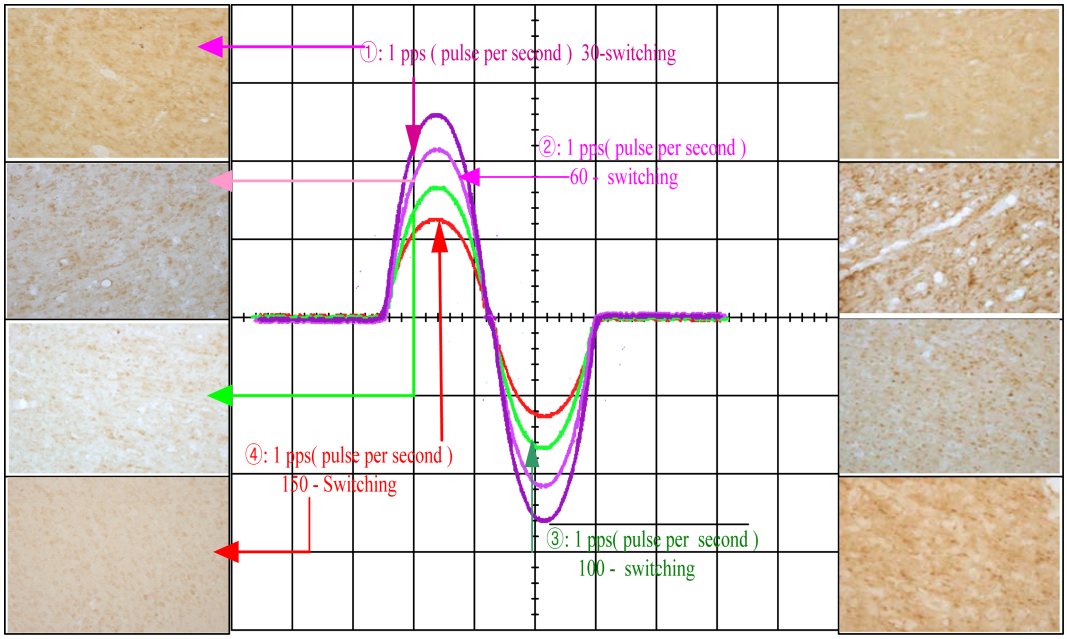

Fig. 10. (Color online) After stimulation the 30, 60, 100, 150 switching treatment pulse, poly ADP-ribose polymerase protein expression in the cerebrum (left: FWCW-TMS, right: none).

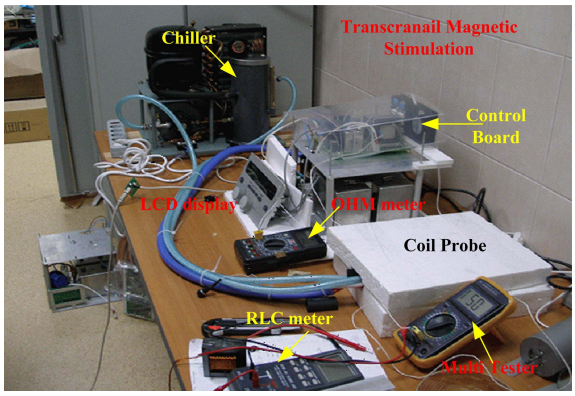

Fig. 11. (Color online) The following figure designed and produced in a laboratory experiment is implemented.

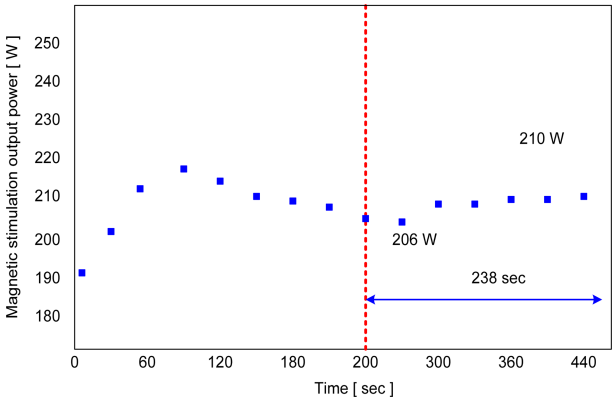

Fig. 12. (Color online) The time evolution of the TMS output power at the condition of the blocking capacitor of 1 μF and input power of 209W.

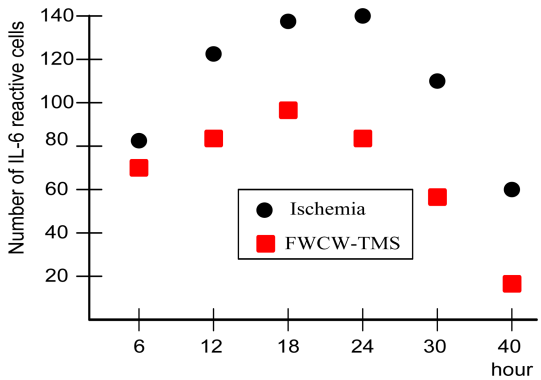

Fig. 13. (Color online) Interleukins-6 reaction cells depending on time suggests that the number of IL-6 reaction cells increased in the early stages in the thrombotic stroke group and FWCW-MS group and there were large differences in the later stage.

of the end pulse magnetic stimulation equipment depending on the number of switching time control, and pps were controlled, and the change in the precise magnetic stimulation equipment was possible. Regarding treatment through the TMS of FWCW method in clinical aspects, many studies reported a special effect in improving the conditions of cerebral blood vessel after an incident including thrombotic stroke. The effect of magnetic stimulation is used to increase the functional recovery from a range of disorders including stroke. In particular, one of the strongest effects of magnetic stimulation treatment was reported to offer rapid recovery from the complications of

a stroke. A wide range of Poly ADP-ribose polymerase activation occurs when thrombotic stroke occurs. The clearly found action of Poly ADP-ribose polymerase occurs in the form of over-activity in the cell death of necrosis, and becomes the cause of the pathological process of cell death. With the application of 3-aminobenzamide, which is used widely as a restrainer of Poly ADP-ribose polymerase, the cerebral infarction volume caused by temporary or permanent middle cerebral artery infarct is reduced. A Poly ADP-ribose polymerase restrainer is also used as a protector from the nerve toxicity originated from NO, hydrogen peroxide.

As shown in Figure 10, an analysis of the number of Interleukins-6 reaction cells depending on time suggests that the number of IL-6 reaction cells increased in the early stages in the thrombotic stroke group and FWCW-MS group and there were large differences in the later stage. The FWCW-MS group also showed an initial increase and decreasing tendency afterwards, and this group also showed a smaller number of IL-6 reaction cells compared to the number of the thrombotic stroke. In addition, regarding the effect of the magnetic stimulation equipment, the number of Poly ADP-ribose polymerase reaction cells in the cerebrum significantly decreased ($p < 0.05$) in the FWCW-MS group compared to the thrombotic stroke groups 24 hours later. Poly ADP-ribose polymerase immunity reaction cells related to necrosis were affected the most by FWCW-MS in 24 hours, indicating that there was an effect of restraining necrosis. Protein Poly ADP-ribose polymerase related to the rate of necrosis, which increased after a thrombotic stroke, was reduced by magnetic stimulation, suggesting that there was a nerve cell protection effect of magnetic stimulation, which prevented the necrosis of nerve cells.

References

[1] Walsh, V. and Pascual-Leone, A. The MIT Press, Cambridge (2005).
[2] Dong-Ho Ha, J. Magnetics **16**, 234 (2011).
[3] R. S. J. Frackowiak, K. J. Friston, and C. Frith, Human brain function, 2nd ed., Academic Press, San Diego, (2003).
[4] S.-S. Choi, Journal of Biomedicine and Biotechnology **2011**, 278062 (2011).
[5] Mark S. George, American Psychiatric Publishing, Inc. London (2006).
[6] Nicole A. Lazar. The Statiscal Analysis of Functional MRI Data. Springer, Berlin (2008).
[7] S.-S. Choi, Biomedical Engineering: Applications, Basis and Communications **25**, (2013).
[8] E. Wassermann, Oxford University Press, Oxford (2007).
[9] Orrin Devinsky and Aleksandar Beric, Eectrical and magnetic stimulation of the brain and spinal cord, Raven Press, New York (1993).
[10] A. T. Barker, C. W. Garnham, and I. L. Freeston, Electroencephalogr. Clin. Neurophysiol. Suppl. **43**, (1991).